600m / 1000m Environmental Adaptability Laser Rangefinder Module

Key Properties

- Measurement Range: 3m ~ 600m/1000m
- Measurement Frequency: ≥3 Hz
- Measurement Accuracy: 3~100m approx. ±1m
  ≥100m: ±(1+Dx0.25%)m, D=distance
- Wavelength: 905 nm
- Laser Safety: Class 1
- Communication Interface: TTL (UART)
- Aiming Laser
- Environmental Adaptability

Application

Handheld equipment / Night vision / Thermal imager / Telescope / Rifle scope / Laser illuminator
Other Application / Aviation / police / Railway / Electric power / Water conservancy / Communication
Environment / Geology / Construction / Fire station / Blasting / Agriculture / Forestry / Outdoor sports

Product Code

Product	Measure Range	Frequency	Type	Communication Interface
LRF: Laser Rang Finder	600M: 600m 1000M: 1000m	3: 3Hz	L: Long-Distance H: High-end	Default: TTL (UART) USB: USB Converter
Example: LRF600M3LSP				

Introduction

LRF1000M3LSP is an advanced model for outdoor long-range laser rangefinder, with a range to measure up to 1000m. Besides, It has better environmental adaptability to meet industrial and military standards.

The small-size and lightweight feature is convenient for OEM users to integrate into systems and equipment, and the UART communication interface provides users to develop and program their own application.

We provide two options 600m and 1000m for this product, due to each option will lead to the different specification of its optical lens and circuit adjustments.

1. Specifications

Technical specifications	
Model Name	LRF600M3LSP / LRF1000M3LSP
Measurement Range	3m ~ 600m / 1000m
Measurement Frequency	≥3Hz
Measurement Accuracy	3~100m: ±1m ≥100m: ±(1+Dx0.25%)m, D=distance
Wavelength	905nm
Wavelength of Aiming Laser	650nm
Laser Safety	905nm: Class 1 (IEC 60825-1:2014) 650nm: Class 3A (IEC 60825-1:2014)
Measurement Method	Pulse
Communication	
Communication Interface	3.3V TTL (UART)
Interface Connector	4P-1.25
Baud Rate	2400 / 4800 / 9600 / 19200 / 38400 / 57600 / 115200 bps
Electrical	
Input Voltage	3.3V±0.3V
Power Consumption	Operational: ≤150mW During measurement: ≤250mW
Mechanical	
Dimensions	45 x 41 x 21mm
Weight	42g±5g
Structural Materials	Aluminum
Environmental	
Operating Temperature	-40°C~60°C -10~50°C, Accuracy ±1m -20~-10°C, Accuracy ±2m -30~-20°C, Accuracy ±5m
Certification	
CE / FCC / RoHS	

Note:

1. Measurement conditions: Target size ≥ 1.5m × 1.5m, reflectivity ≥ 85%, outdoor visibility greater than 5 km. (The effective range of the module is affected by target color, size, surface reflectivity and atmospheric visibility)
2. Product specifications support customization, if you require further assistance please contact us.

2. Pin Assignment

Red	V+	DC 3~3.3V
Green	RxD	UART-RxD (3.3V TTL)
White	TxD	UART-TxD (3.3V TTL)
Black	Gnd	Ground

3. Dimensions

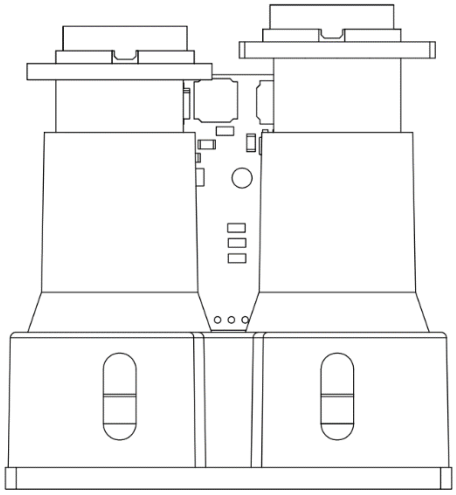

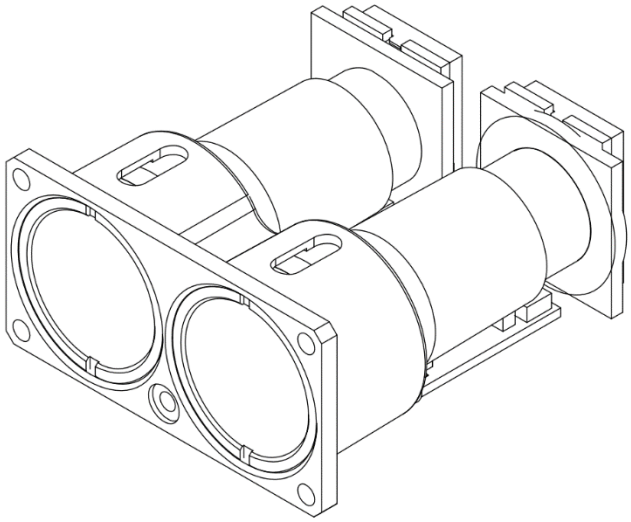

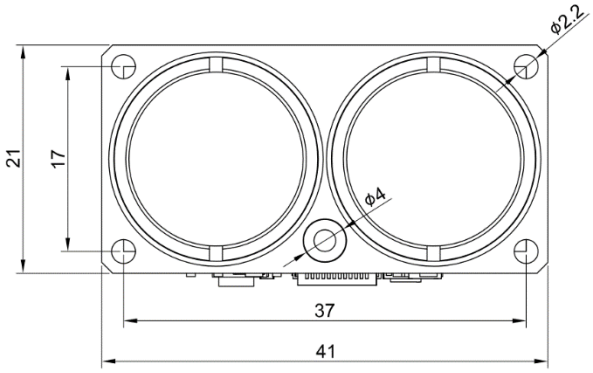

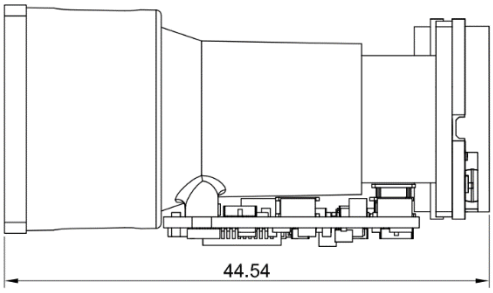

4. Communication

4.1 Communication frame format:

Head1 (1 byte)	Head2 (1 byte)	Data Length (1 byte)	Address (1 byte)	Command (1 byte)	Data (N byte)	Checksum (1 byte)	End1 (1 byte)	End2 (1 byte)
AE	A7						BC	BE

*Head: Fixed as 0xAE 0xA7

*Data Length: Length from Data Length to Checksum. (include checksum)

*Address: Address of laser rangefinder module, default is 0x00.

*Command: Command identification characters, please refer to Chapter 5.1 Command List.

*Data: Data content, number of byte varies by command.

*Checksum: Sum of Data Length, Address, Command and Data. (without carry).

*End: Fixed as 0xBC 0xBE

4.2 UART configuration parameters:

8N1 with default 9600 baud rate, byte data are expressed in hexadecimal.

Data bits: 8

Parity bits: None

Stop bits: 1

5. Command

5.1 Command List

Master Command	
Command code	**Description**
0x01	Read Version
0x0A	Set BaudRate
0x0B	Set Address
0x05	Single Measurement
0x0E	Continuous Measurement
0x0F	Stop Measurement
0x40	Aiming Laser ON/OFF

Slave Response	
Recognition code	**Description**
0x81	Device Version
0x8A	BaudRate Setting Result
0x8B	Address Setting Result
0x85	Measurement Results
0xC0	Aiming Laser ON/OFF

5.2 Command Detail

5.2.1 Read Version

Master sends								
Head1 (1 byte)	Head2 (1 byte)	Data Length (1 byte)	Address (1 byte)	Command (1 byte)	Data (0 byte)	Checksum (1 byte)	End1 (1 byte)	End2 (1 byte)
0xAE	0xA7	0x04	0x00	0x01		0x05	0xBC	0xBE
Slave responses								
Head1 (1 byte)	Head2 (1 byte)	Data Length (1 byte)	Address (1 byte)	Command (1 byte)	Data (N byte)*	Checksum (1 byte)	End1 (1 byte)	End2 (1 byte)
0xAE	0xA7	*	0x00	0x81	VER*	*	0xBC	0xBE

*N byte: The number of bytes is data length-4. (Number of bytes returned will be different depending on device version)

*VER: Version of device, format is ASCII and needs to be converted to string.

5.2.2 Set Baudrate

Master sends								
Head1 (1 byte)	Head2 (1 byte)	Data Length (1 byte)	Address (1 byte)	Command (1 byte)	Data (1 byte)	Checksum (1 byte)	End1 (1 byte)	End2 (1 byte)
0xAE	0xA7	0x05	0x00	0x0A	BAUD*	*	0xBC	0xBE

*BAUD: 0x00 as 2400bps / 0x01 as 4800bps / 0x02 as 9600bps / 0x03 as 19200bps
0x04 as 38400bps / 0x05 as 57600bps / 0x06 as 115200bps

*Default baud rate is 9600bps.

*Module need re-powering after baud rate setting.

Slave responses								
Head1 (1 byte)	Head2 (1 byte)	Data Length (1 byte)	Address (1 byte)	Command (1 byte)	Data (0 byte)	Checksum (1 byte)	End1 (1 byte)	End2 (1 byte)
0xAE	0xA7	0x04	0x00	0x8A		08E	0xBC	0xBE

5.2.3 Set Address

Master sends								
Head1 (1 byte)	Head2 (1 byte)	Data Length (1 byte)	Address (1 byte)	Command (1 byte)	Data (1 byte)	Checksum (1 byte)	End1 (1 byte)	End2 (1 byte)
0xAE	0xA7	0x05	0x00	0x0B	ADDR*	*	0xBC	0xBE
Slave responses								
Head1 (1 byte)	Head2 (1 byte)	Data Length (1 byte)	Address (1 byte)	Command (1 byte)	Data (0 byte)	Checksum (1 byte)	End1 (1 byte)	End2 (1 byte)
0xAE	0xA7	0x04	ADDR*	0x8B			0xBC	0xBE

*ADDR: Address of device, setting range is 0x01~0xEF.

*0x00 is general broadcast address, if you forget the device address, you can still use 0x00 to control device.

5.2.4 Single Measurement

Master sends								
Head1 (1 byte)	Head2 (1 byte)	Data Length (1 byte)	Address (1 byte)	Command (1 byte)	Data (0 byte)	Checksum (1 byte)	End1 (1 byte)	End2 (1 byte)
0xAE	0xA7	0x04	0x00	0x05		0x09	0xBC	0xBE
Slave responses								
Please refer to Chapter 5.2.6 Measurement Result								

5.2.5 Continues Measurement

Master sends								
Head1 (1 byte)	Head2 (1 byte)	Data Length (1 byte)	Address (1 byte)	Command (1 byte)	Data (0 byte)	Checksum (1 byte)	End1 (1 byte)	End2 (1 byte)
0xAE	0xA7	0x04	0x00	0x05		0x09	0xBC	0xBE
Slave responses								
Please refer to Chapter 5.2.6 Measurement Result								

5.2.6 Measurement Result

Slave responses								
Head1 (1 byte)	Head2 (1 byte)	Data Length (1 byte)	Address (1 byte)	Command (1 byte)	Data (19 byte)	Checksum (1 byte)	End1 (1 byte)	End2 (1 byte)
0xAE	0xA7	0x17	0x00	0x85	MMSG*		0xBC	0xBE

*MMSG: Measurement results, definitions are as follows table.

byte1~2	byte3~4	byte5~18	byte19
Reserved	Straight Distance	Reserved	Distance Unit

* The value of the measurement item occupies two bytes, the high 8 bits before and the low 8 bits after.

*Distance resolution is 0.1 meter and unit is set by byte 19.

Example: If byte3~4 as 0x08 0xCE means Straight Distance is 225.4 meter.

*Distance Unit (byte19): 0x01 as meter. (provide unit customization for yard and feet.)

*Slave Response on failure in Single Measurement : AE A7 04 00 05 09 BC BE.

*Slave Response on failure in Continues Measurement : AE A7 04 00 05 09 BC BE.

*The standard product is only valid for the straight distance function, the rest is reserved (fixed as 0).

For tilt sensor integrated versions with angle and height measurement function, please contact us.

5.2.7 Stop Measurement

Master sends								
Head1 (1 byte)	Head2 (1 byte)	Data Length (1 byte)	Address (1 byte)	Command (1 byte)	Data (0 byte)	Checksum (1 byte)	End1 (1 byte)	End2 (1 byte)
0xAE	0xA7	0x04	0x00	0x0F		0x13	0xBC	0xBE
Slave responses								
Head1 (1 byte)	Head2 (1 byte)	Data Length (1 byte)	Address (1 byte)	Command (1 byte)	Data (0 byte)	Checksum (1 byte)	End1 (1 byte)	End2 (1 byte)
0xAE	0xA7	0x04	0x00	0x8F		0x93	0xBC	0xBE

5.2.8 Aiming Laser ON/OFF

Master sends								
Head1 (1 byte)	Head2 (1 byte)	Data Length (1 byte)	Address (1 byte)	Command (1 byte)	Data (1 byte)	Checksum (1 byte)	End1 (1 byte)	End2 (1 byte)
0xAE	0xA7	0x05	0x00	0x40	DATA*	*	0xBC	0xBE
*DATA: 0x01 for Aiming Laser ON, 0x00 for Aiming Laser OFF								
Slave responses								
Head1 (1 byte)	Head2 (1 byte)	Data Length (1 byte)	Address (1 byte)	Command (1 byte)	Data (0 byte)	Checksum (1 byte)	End1 (1 byte)	End2 (1 byte)
0xAE	0xA7	0x04	0x00	0xC0		0xC4	0xBC	0xBE

Laser Safety

The light emitted from these devices has been set in accordance with IEC60825. However, staring into the beam, whether directly or indirectly, must be avoided.

Class I

The maximum permissible exposure(MPE) cannot be exceeded, it includes High-power lasers within an enclosure that prevents exposure to the radiation and that cannot be opened without shutting down the laser. For example, a continuous laser at 600nm can emit up to 0.39mW, but for shorter wavelengths, the maximum emission is lower.

Class II

“Caution”, visible laser light less than 1.0mW. Considered eye safe, normal exposure to this type of beam will not cause permanent damage to the retina.

Class IIIA

“Danger”, visible laser light between 1.0mW and 5.0mW. Considered eye safe with caution. Focusing of this light into the eye could cause some damage.

Class IIIB

“Danger”, infrared(IR), and high power visible lasers considered dangerous to the retina if exposed. NB: it is important to note that while complying with the above classifications, unless otherwise stated. Our laser diode products are not certified and are designed solely for use in OEM products. The way in which device is used in the final product may alter its original design classification, and it is the responsibility of the OEM to ensure compliance with the relevant standards.

Specifications are subject to change without notice.